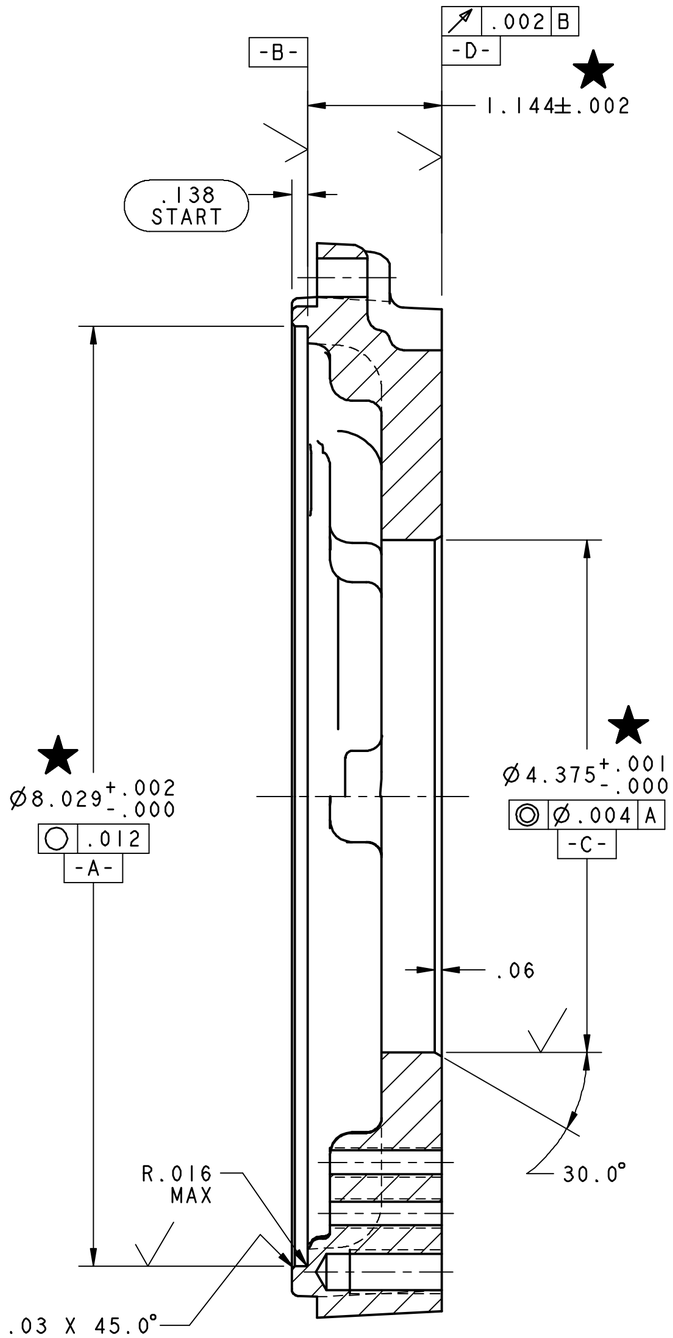

SECTION A-A

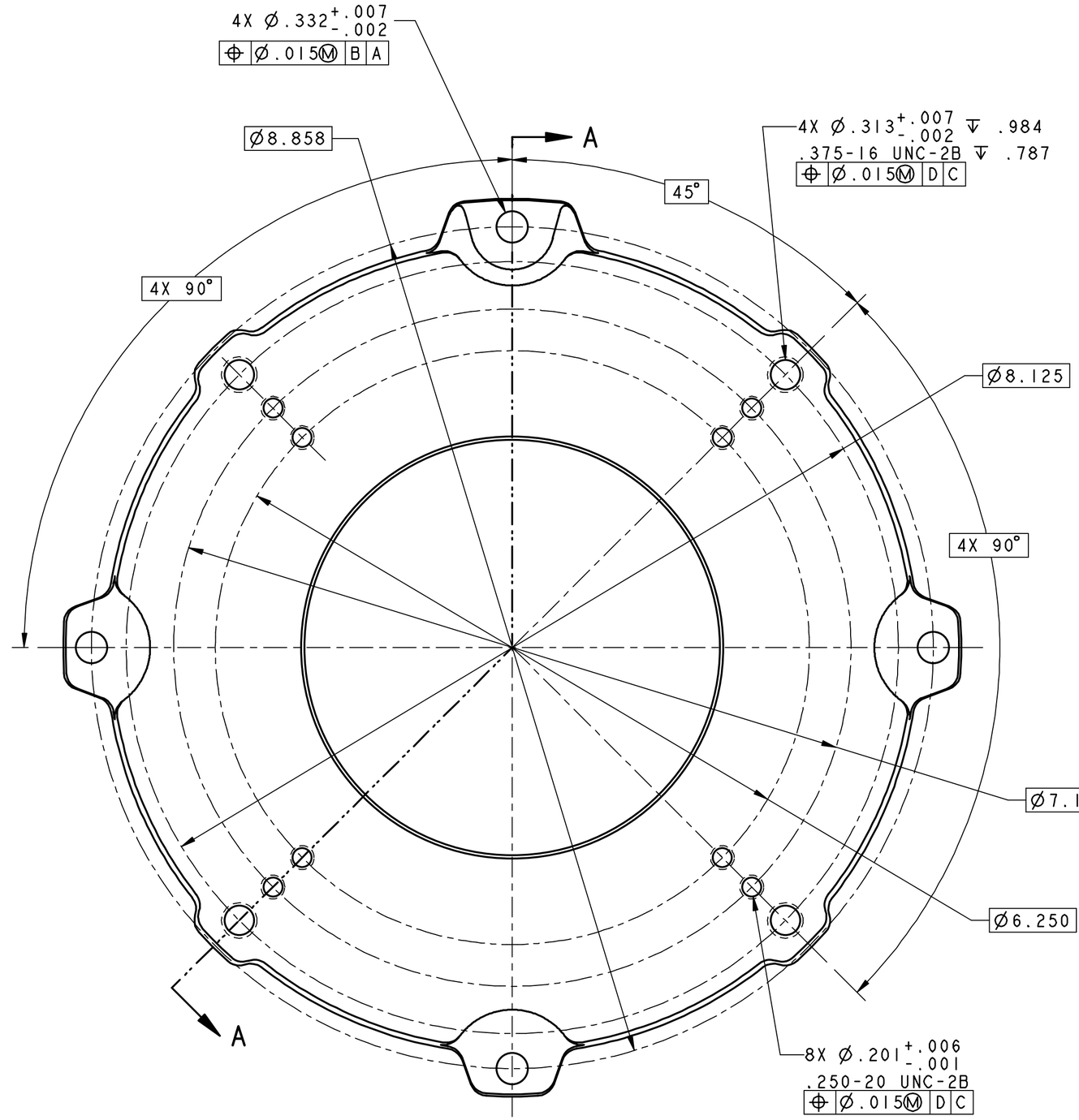

NOTES: (UNLESS OTHERWISE SPECIFIED)

1. REFER TO SEIM 24-1 CLASSIFICATION SYMBOLS.

ALT	CHANGE NOTICE	DESCRIPTION OF CHANGE
A	MISC	LOADED TO SOLID EDGE
B	MISC	LOADED TO PRO/E

COPICS CSTG NO. 964417- RC	COPICS PART NO. 964418-000	GENERIC MODEL NAME 0964417-BKT	INSTANCE NAME 0964418
EMERSON MOTOR COMPANY ST. LOUIS, MISSOURI	MATERIAL REFER TO RAW CSTG	TITLE BRACKET, ADAPTOR	
— PROCESS PER GROUP 91500 —		PART NO. 0964418	FRAME 160
TOLERANCES ON DECIMALS .XX= ±.03 .XXX= ±.015 ANGLES X= ±1°	DRAWN TLC 29-FEB-96 / ENGINEER CJR 29-FEB-96 / REVISED KRF 25-FEB-05 / APPROVED MCC 25-FEB-05	SCALE 1:1 / UNITS IN / CSTG NO. 0964417-RC	TYPE IMH
		DWG NO. 0964418	ALT B / SHEET NUMBER 1 OF 1 / DWG SIZE C